Mentor: Barry Dowdeswell & Moderator: Matthew Kuo

S1, 2020

Function Block Diagnostic System & IOT devices

Qijin Chen | Zhe Wang | Reuben Spatch | Sachit Gagneja

Project Purpose

There are many forms of advanced automation active in our daily lives, and each machine has specific requirements that are completed by functions inside their devices. These range from electric cars to Boeing 747s going missing to naval submarines exploring the depths of the Pacific Ocean.
Each machine is made of small parts that build to a whole when a whole is created without any knowledge of how each component works. We will be lost when looking for the issues when the machines break down.
The current project is aimed to create a system that can report back via a graphical user interface to display where and what issues are being caused inside these giant machines. With accurate display and understanding of how computers work, we will be able to optimize and improve machinery with less time and better understanding.

Project Objective & Goals

Currently, the project is done through a 4DIAC application running FORTE system which allows for an imaginative creation of an IoT device yet there is not much to it in the way of real-world implementation (Eclipse Foundation, Inc., 2020), we aim to bring the function of the 4DIAC accompanied with FORTE to the field allowing for much more comprehensive analysis.
The purpose of this project is to develop a user-friendly graphical user interface that offers an accessible and convenient way of monitoring the function of the IoT devices and can help in the fault diagnosis of the components of the system.
The objective of our project is to comprehend and represent in a visual manner, the industrial process measurement and control systems which follow the guidelines of the international standard IEC 61499. The expected outcome of our group efforts is to create a real-world responsive 4DIAC FORTE-Esque GUI.
This entails a GUI which can take in an XML file and use the information provided to produce a display of function blocks along with the connections between variable inputs and outputs.
Meanwhile, alcohol IoT devices are being assembled to determine whether a hand is thoroughly sanitized or not, and also the tutorial workshop for those people who are interested in IoT concepts.

Methodology

For the backend of the application, we worked on the XML reader while the Front-end GUI was being created. This would take in the XML file provided and pass the information needed to the GUI, allowing for a seamless transition.
For the backend of the application, we worked on the XML reader while the Front-end GUI was being created. This would take in the XML file provided and pass the information needed to the GUI, allowing for a seamless transition.
For the frontend of the application, three interfaces or platforms were considered: Swing, JavaFX, and also OpenGL, the final version of the application is based on Java Swing. Several swing panels are condensed into a single display panel.
The IoT devices are being built using Arduino, alcohol sensor, LED matrix, and the OLED display, those components are interconnected each other, when the alcohol level is meet the threshold, it will display relevant information for the user.
The tutorial workshop is based on the Arduino code. Each workshop document will include a simple step-by-step tutorial until it is built up a complete running system.

Results

Reading Files

DOM4J is the primary implementation method used to load and reading XML files, which analysis and saves the necessary information of Function Block and provides the name, coordinate attributes for display function. DOM4J is an excellent Java XML API, with excellent performance, powerful functions and extremely easy to use features.

After the user prints the "Load Files" button from the control panel and selected the correct directory. It will load the XML file from the list, then call the SAXReader function and build a simulates XML tree, which used to access the attributes from a different level.
To handle the data from XML files, we build a hierarchical construction of data structures, form systems to functions blocks.

The top-level is the system, which includes the necessary data and connection information. All the node data will be stored in this data structure. The program can access the data by instance, the function object.

```
<System Comment="" Name="Simple2">
  <VersionInfo Author="badger" Date="2019-10-21" Version="1.0"/>
  <Application Comment="" Name="Simple2App">
    <SubAppNetwork>
      <FB Comment="" Name="E_CYCLE" Type="E_CYCLE" x="2117.6470588235293" y="11
```

Outlook

The debug UI contains two main parts, part A is the control panel, and part B is the display canvas, which will display the function block diagram and connections for the user.

Control Panel: It contains three main components, button area, parameter detail viewer, and log console.

Display Canvas: The display canvas will display the diagram of a function block when the system is successfully loaded information from the directory. Several panels formed the final displayed panel.

It can be a base panel (layer 1), function block layer (layer 2), connection layer (layer 3) and initial value layer (layer 4).

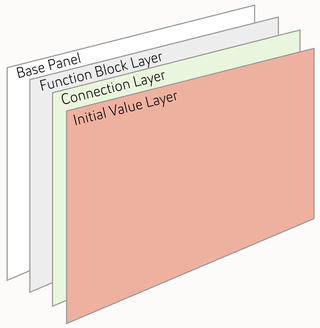

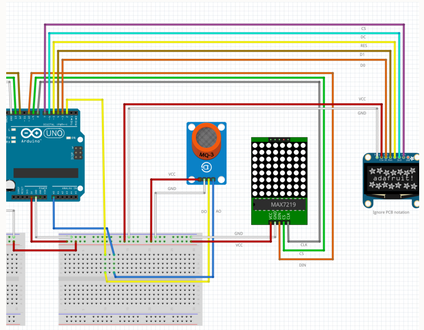

IoT Devices

The component was interconnected and able to display the current reading of alcohol level when the alcohol level has reached the threshold, which at this stage the hand is thoroughly sanitized, it will post information for users to notify they have clearance to continue.

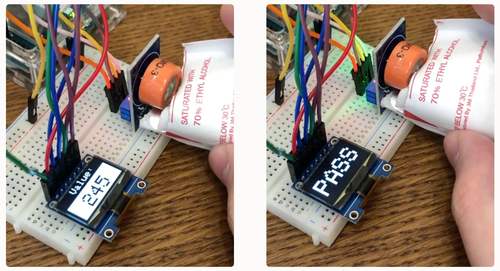

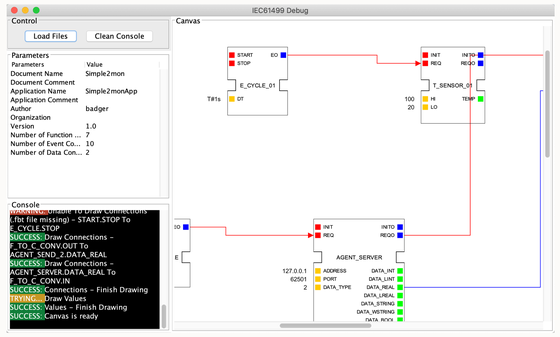

Arduino Workshops

Several tutorials are being produced during the past years. It is converting the installation, LED blink, button usages, and finally, building up a system that detects the alcohol level.

Technical Difficulty

The most notable technique difficult was the implements of the connection between function blocks, the original documentation of 4DIAC does not contain any information about how the connection is being established when the file is being loaded, after a long time tryout, we found out that the number of X1, X2 will represent the distance of a connection make a turn, but it will still need the assistance of other nodes to determine the direction of it, it takes a long period to develop this feature.

References

Eclipse Foundation, Inc. (2020, June 15). What is Eclipse 4diac? Retrieved from Eclipse - 4diac: https://www.eclipse.org/4diac/